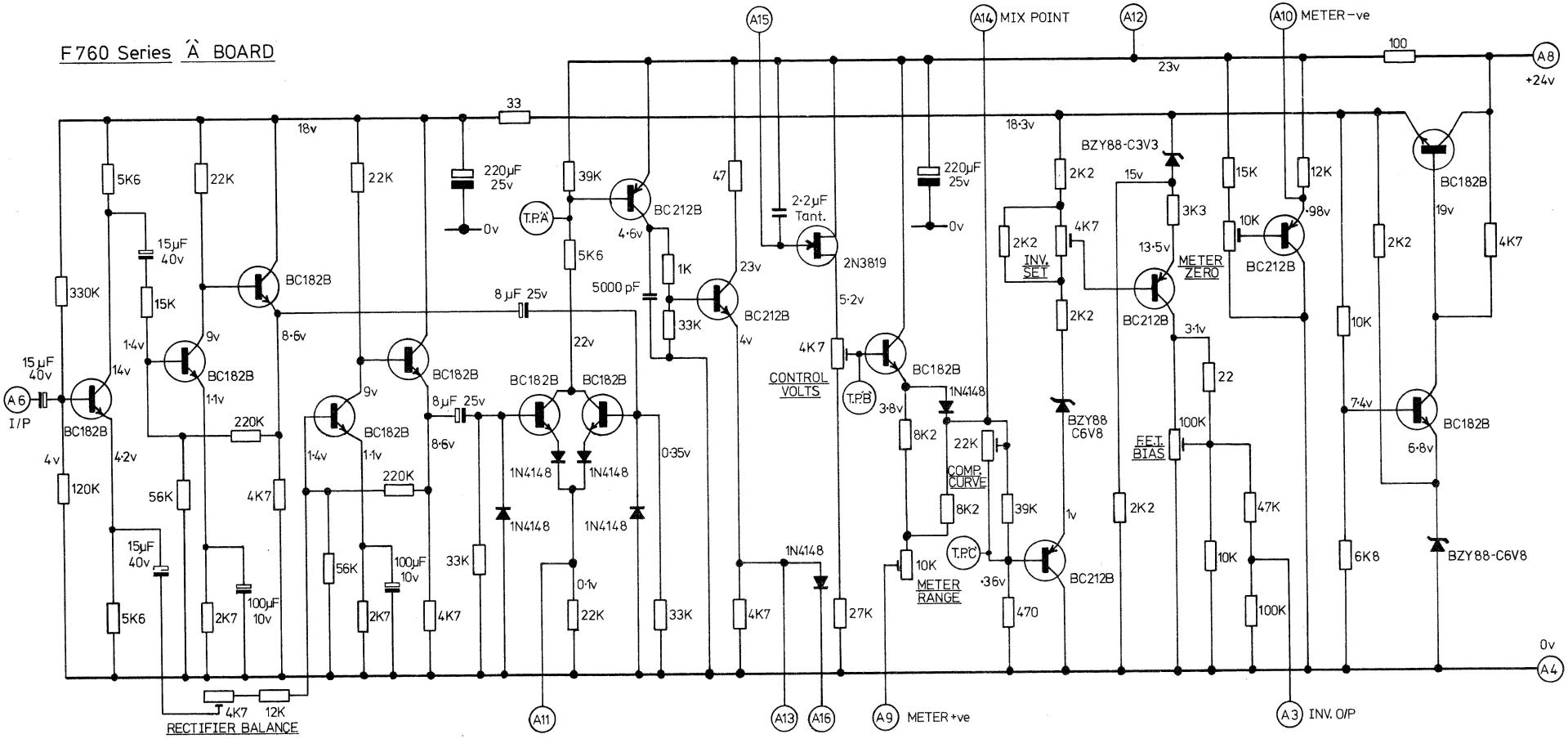F760 Series 'A' BOARD