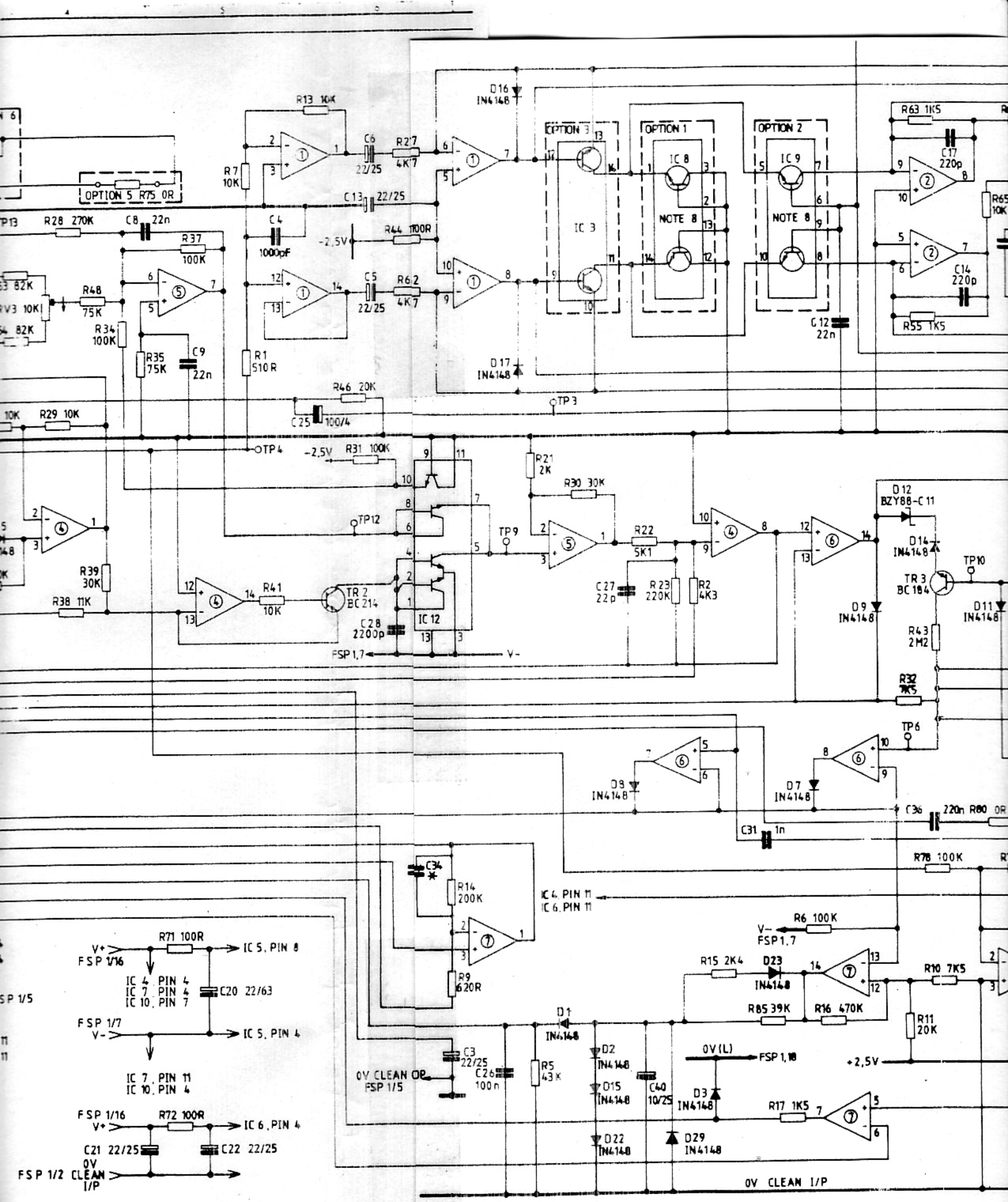

	3	2	1	S	R	A	ISSUE	FIRST USED D 367.
	2 SEPT 83	14 FEB 83	17.2.82	7/1/82	13/10/81	24/6/81	DATE	DRN. CE
	62503						CHANGE	TRACED S